MCP1603/B/L

2.0 MHz, 500 mA Synchronous Buck Regulator

Features

- Over 90% Typical Efficiency
- Output Current Up To 500 mA
- Low PFM Quiescent Current = 45 µA, typical (MCP1603/L)
- Low Shutdown Current = 0.1 µA, typical
- Adjustable Output Voltage:
  - 0.8V to 4.5V
- Fixed Output Voltage:
  - 1.2V, 1.5V, 1.8V, 2.5V, 3.3V (MCP1603/L)
  - 1.8V, 3.3V (MCP1603B)
- 2.0 MHz Fixed-Frequency PWM (Heavy Load)
- Automatic PWM-to-PFM Mode Transition (MCP1603/L)
- PWM Mode Only Option (MCP1603B)
- 100% Duty Cycle Operation
- Internally Compensated
- Undervoltage Lockout (UVLO)
- Overtemperature Protection
- Space Saving Packages:
  - 5-Lead TSOT, Two Pinout Types (MCP1603/L)
  - 8-Lead 2 x 3 DFN

Applications

- Cellular Telephones
- Portable Computers
- Organizers / PDAs
- USB Powered Devices
- Digital Cameras
- Portable Equipment
- +5V or +3.3V Distributed Systems
- Headsets

General Description

The MCP1603/B/L is a high-efficiency, fully-integrated 500 mA synchronous buck regulator whose 2.7V to 5.5V input voltage range makes it ideally suited for applications powered from 1-cell Li-Ion or 2-cell/3-cell NiMH/NiCd batteries.

At heavy loads, the MCP1603/B/L operates in the 2.0 MHz fixed frequency pulse-width modulation (PWM) mode, which provides a low noise, low-output ripple, small-size solution. When the load is reduced to light levels, the MCP1603/L automatically changes operation to a Pulse Frequency Modulation (PFM) mode to minimize quiescent current draw from the battery. No intervention is necessary for a smooth transition from one mode to another. These two modes of operation allow the MCP1603/L to achieve the highest efficiency over the entire operating current range.

The MCP1603B device disables the PFM mode switching, and operates only in normal PWM mode over the entire load range (without skipping). MCP1603B is for applications that cannot tolerate the low-frequency output ripple associated with PFM switching.

The MCP1603/B/L family is available with either an adjustable or fixed-output voltage. The available fixed output voltage options for MCP1603/L are 1.2V, 1.5V, 1.8V, 2.5V and 3.3V, and for MCP1603B are 1.8 and 3.3V. When a fixed option is used, only three additional small external components are needed to form a complete solution. Couple this with the low profile, small-foot print packages and the entire system solution is achieved with minimal size.

Additional protection features include: UVLO, overtemperature and overcurrent protection.

© 2007-2012 Microchip Technology Inc.

Package Types

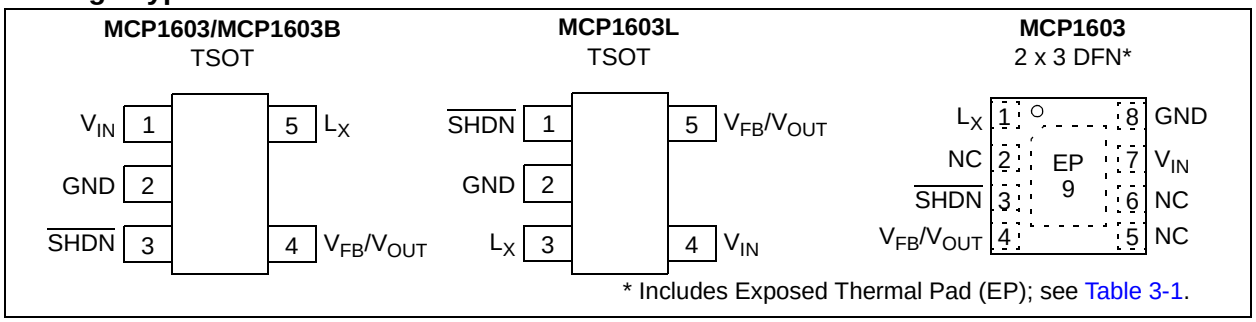

* Includes Exposed Thermal Pad (EP); see Table 3-1.

Typical Application Circuit

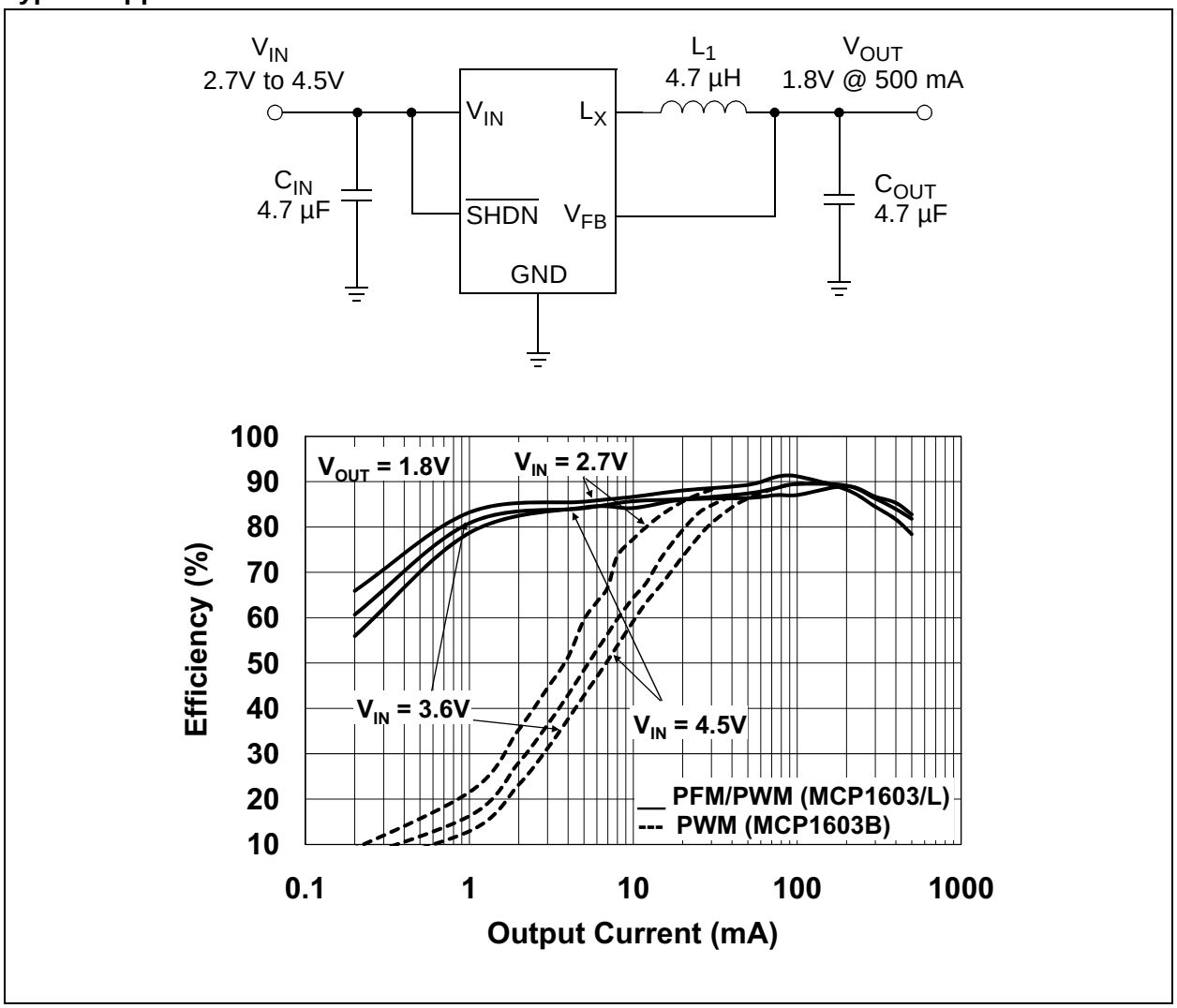

© 2007-2012 Microchip Technology Inc.

Functional Block Diagram

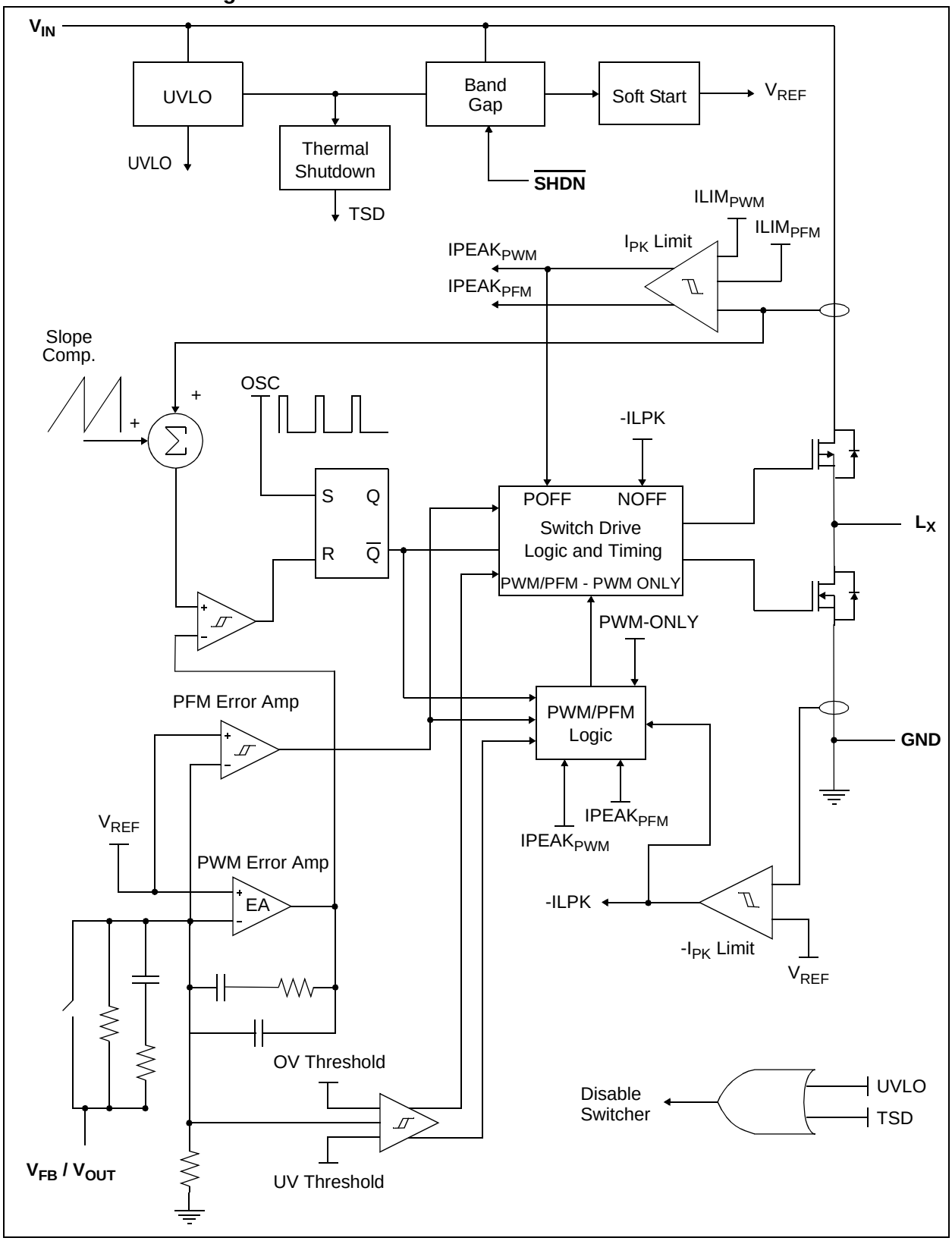

NOTES:

© 2007-2012 Microchip Technology Inc.

1.0 ELECTRICAL CHARACTERISTICS

Absolute Maximum Ratings †

V_{IN} - GND.....+6.0V
All Other I/O .....(GND - 0.3V) to (V_{IN} + 0.3V)
L_X to GND ..... -0.3V to (V_{IN} + 0.3V)
Output Short Circuit Current .....Continuous
Power Dissipation (**Note 5**).....Internally Limited
Storage Temperature .....-65°C to +150°C
Ambient Temp. with Power Applied .....-40°C to +85°C
Operating Junction Temperature.....-40°C to +125°C
ESD Protection On All Pins:
HBM .....4 kV
MM 300V

† **Notice:** Stresses above those listed under "Maximum Ratings" may cause permanent damage to the device. This is a stress rating only and functional operation of the device at those or any other conditions above those indicated in the operational sections of this specification is not intended. Exposure to maximum rating conditions for extended periods may affect device reliability.

DC CHARACTERISTICS

Electrical Characteristics: Unless otherwise indicated, MCP1603/L, V_{IN} = $\overline{SHDN}$ = 3.6V, C_{OUT} = C_{IN} = 4.7 µF, L = 4.7 µH, V_{OUT}(ADJ) = 1.8V, I_{OUT} = 100 mA, T_A = +25°C. **Boldface** specifications apply over the T_A range of -40°C to +85°C.

Parameters	Sym	Min	Typ	Max	Units	Conditions
Input Characteristics						
Input Voltage	V_{IN}	**2.7**	—	**5.5**	V	**Note 1**
Maximum Output Current	I_{OUT}	**500**	—	—	mA	**Note 1**
Shutdown Current	$I_{IN_\overline{SHDN}}$	—	0.1	1	µA	$\overline{SHDN}$ = GND
Quiescent Current - PFM	I_Q	—	45	**60**	µA	$\overline{SHDN}$ = V_{IN}, I_{OUT} = 0 mA, device switching
Quiescent Current - PWM	I_Q	**1.0**	**2.7**	**4**	mA	$\overline{SHDN}$ = V_{IN}, I_{OUT} = 0 mA, device switching (**MCP1603B**)
Shutdown/UVLO/Thermal Shutdown Characteristics						
$\overline{SHDN}$, Logic Input Voltage Low	V_{IL}	—	—	**15**	%V_{IN}	V_{IN} = 2.7V to 5.5V
$\overline{SHDN}$, Logic Input Voltage High	V_{IH}	**45**	—	—	%V_{IN}	V_{IN} = 2.7V to 5.5V
$\overline{SHDN}$, Input Leakage Current	$I_{L_\overline{SHDN}}$	**-1.0**	±0.1	**1.0**	µA	V_{IN} = 2.7V to 5.5V
Undervoltage Lockout	UVLO	**2.12**	2.28	**2.43**	V	V_{IN} Falling
Undervoltage Lockout Hysteresis	$UVLO_{HYS}$	—	140	—	mV	
Thermal Shutdown	T_{SHD}	—	150	—	°C	**Note 4**, **Note 5**
Thermal Shutdown Hysteresis	$T_{SHD-HYS}$	—	10	—	°C	**Note 4**, **Note 5**

Note 1: The input voltage should be greater then the output voltage plus headroom voltage; higher load currents increase the input voltage required for regulation. MCP1603B device requires a minimum load for regulation. See **Section 2.0, Typical Performance Curves** for typical operating voltage ranges.

2: Reference Feedback Voltage Tolerance applies to adjustable output voltage setting.

3: V_R is the output voltage setting.

4: The maximum allowable power dissipation is a function of ambient temperature, the maximum allowable temperature and the thermal resistance from junction to air (i.e. T_A, T_J, θ_{JA}). Exceeding the maximum allowable power dissipation causes the device to initiate thermal shutdown.

5: The internal MOSFET switches have an integral diode from the L_X pin to the V_{IN} pin, and from the L_X pin to the GND pin. In cases where these diodes are forward-biased, the package power dissipation limits must be adhered to. Thermal protection is not able to limit the junction temperature for these cases.

6: The current limit threshold is a cycle-by-cycle peak current limit.

DC CHARACTERISTICS (CONTINUED)

Electrical Characteristics: Unless otherwise indicated, MCP1603/L, V_{IN} = $\overline{SHDN}$ = 3.6V, C_{OUT} = C_{IN} = 4.7 µF, L = 4.7 µH, V_{OUT}(ADJ) = 1.8V, I_{OUT} = 100 mA, T_A = +25°C. **Boldface** specifications apply over the T_A range of -40°C to +85°C.

Parameters	Sym	Min	Typ	Max	Units	Conditions
Output Characteristics						
Adjustable Output Voltage Range	V_{OUT}	**0.8**	—	**4.5**	V	**Note 2**
Reference Feedback Voltage	V_{FB}	—	0.8	—	V	
Reference Feedback Voltage Tolerance		-3.0	—	+3.0	%	T_A = -40°C to +25°C
		-2.5	—	+2.5	%	T_A = +25°C to +85°C
Feedback Input Bias Current	I_{VFB}	—	0.1	—	nA	
Output Voltage Tolerance Fixed	V_{OUT}	-3.0%	V_R	+3.0%	%	T_A = -40°C to +25°C, **Note 3**
	V_{OUT}	-2.5	V_R	+2.5	%	T_A = +25°C to +85°C, **Note 3**
Line Regulation	$V_{LINE-REG}$	—	0.3	—	%/V	V_{IN} = V_R + 1V to 5.5V, I_{OUT} = 100 mA
Load Regulation	$V_{LOAD-REG}$	—	0.35	—	%	V_{IN} = V_R +1.5V, I_{LOAD} = 100 mA to 500 mA
Internal Oscillator Frequency	F_{OSC}	**1.5**	2.0	**2.8**	MHz	
Start Up Time	T_{SS}	—	0.6	—	ms	T_R = 10% to 90%
R_{DSon} P-Channel	R_{DSon-P}	—	500	—	mΩ	I_P = 100 mA
R_{DSon} N-Channel	R_{DSon-N}	—	500	—	mΩ	I_N = 100 mA
L_X Pin Leakage Current	I_{LX}	**-1.0**	±0.1	**1.0**	µA	$\overline{SHDN}$ = 0V, V_{IN} = 5.5V, L_X = 0V, L_X = 5.5V
Positive Current Limit Threshold	$+I_{LX(MAX)}$	—	860	—	mA	**Note 6**

Note 1: The input voltage should be greater then the output voltage plus headroom voltage; higher load currents increase the input voltage required for regulation. MCP1603B device requires a minimum load for regulation. See **Section 2.0, Typical Performance Curves** for typical operating voltage ranges.

2: Reference Feedback Voltage Tolerance applies to adjustable output voltage setting.

3: V_R is the output voltage setting.

4: The maximum allowable power dissipation is a function of ambient temperature, the maximum allowable temperature and the thermal resistance from junction to air (i.e. T_A, T_J, θ_{JA}). Exceeding the maximum allowable power dissipation causes the device to initiate thermal shutdown.

5: The internal MOSFET switches have an integral diode from the L_X pin to the V_{IN} pin, and from the L_X pin to the GND pin. In cases where these diodes are forward-biased, the package power dissipation limits must be adhered to. Thermal protection is not able to limit the junction temperature for these cases.

6: The current limit threshold is a cycle-by-cycle peak current limit.

TEMPERATURE SPECIFICATIONS

Electrical Specifications: Unless otherwise indicated, all limits are specified for: V_{IN} + 2.7V to 5.5V

Parameters	Sym	Min	Typ	Max	Units	Conditions
Temperature Ranges						
Operating Junction Temperature Range	T_J	-40	—	+125	°C	Steady State
Storage Temperature Range	T_A	-65	—	+150	°C	
Maximum Junction Temperature	T_J	—	—	+150	°C	Transient
Package Thermal Resistances						
Thermal Resistance, 5L-TSOT	θ_{JA}	—	207.4	—	°C/W	Typical 4-layer Board with Internal Ground Plane
Thermal Resistance, 8L-2x3 DFN	θ_{JA}	—	68	—	°C/W	Typical 4-layer Board with Internal Ground Plane and 2-Vias in Thermal Pad

© 2007-2012 Microchip Technology Inc.

2.0 TYPICAL PERFORMANCE CURVES

Note: The graphs and tables provided following this note are a statistical summary based on a limited number of samples and are provided for informational purposes only. The performance characteristics listed herein are not tested or guaranteed. In some graphs or tables, the data presented may be outside the specified operating range (e.g., outside specified power supply range) and therefore outside the warranted range.

Note: Unless otherwise indicated, MCP1603/L, $V_{IN} = \overline{SHDN} = 3.6V$, $C_{OUT} = C_{IN} = 4.7\ \mu F$, $L = 4.7\ \mu H$, $V_{OUT}(ADJ) = 1.8V$, $I_{LOAD} = 100$ mA, $T_A = +25°C$. Adjustable or fixed output voltage options can be used to generate the Typical Performance Characteristics.

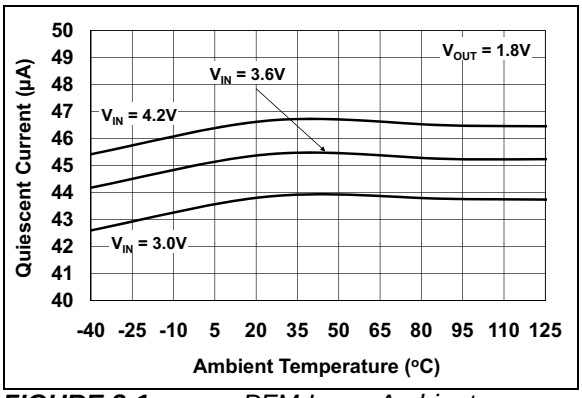

FIGURE 2-1: *PFM I_Q vs. Ambient Temperature (**MCP1603/L**).*

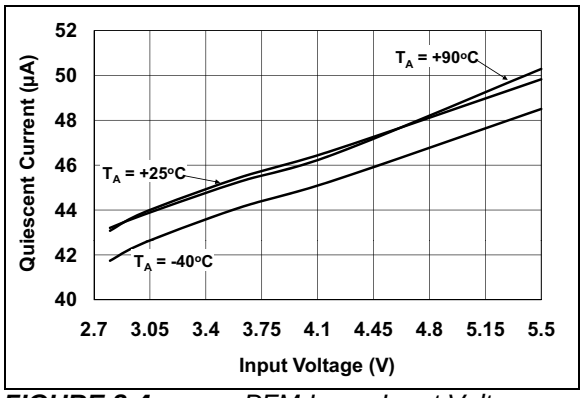

FIGURE 2-4: *PFM I_Q vs. Input Voltage (**MCP1603/L**).*

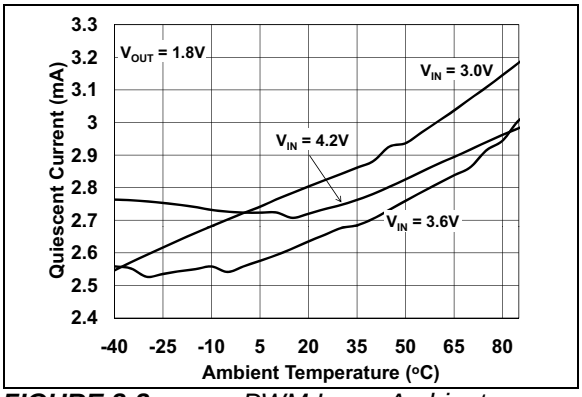

FIGURE 2-2: *PWM I_Q vs. Ambient Temperature (**MCP1603B**).*

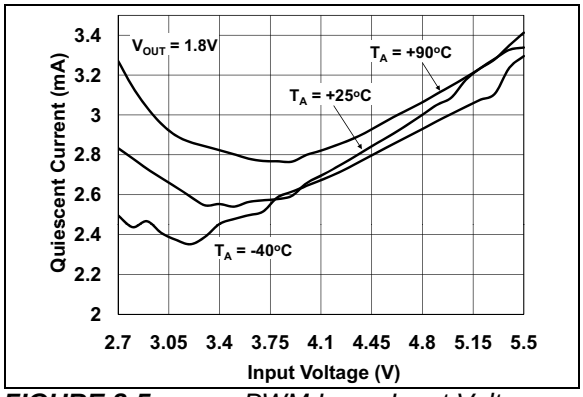

FIGURE 2-5: *PWM I_Q vs. Input Voltage (**MCP1603B**).*

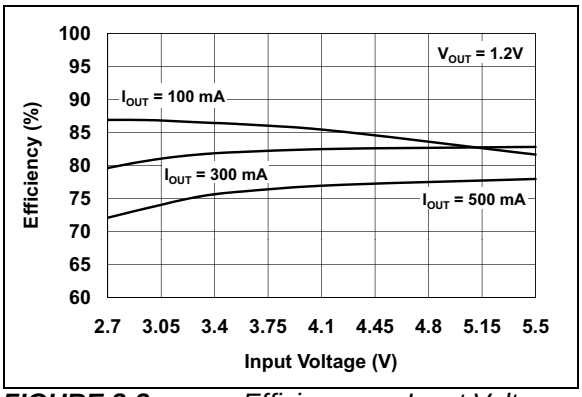

FIGURE 2-3: *Efficiency vs. Input Voltage (V_{OUT} = 1.2V).*

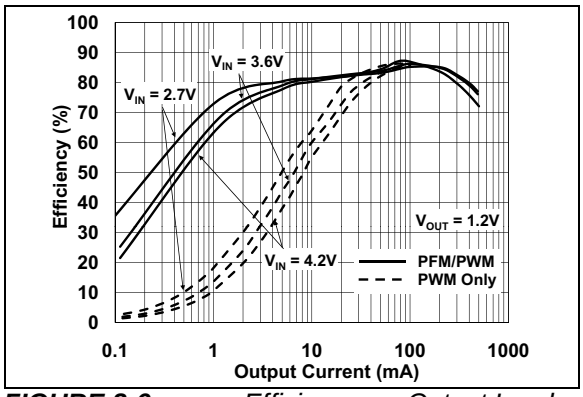

FIGURE 2-6: *Efficiency vs. Output Load (V_{OUT} = 1.2V).*

Note: Unless otherwise indicated, MCP1603/L, $V_{IN} = \overline{SHDN} = 3.6V$, $C_{OUT} = C_{IN} = 4.7\ \mu F$, $L = 4.7\ \mu H$, $V_{OUT}(ADJ) = 1.8V$, $I_{LOAD} = 100\ mA$, $T_A = +25°C$. Adjustable or fixed output voltage options can be used to generate the Typical Performance Characteristics.

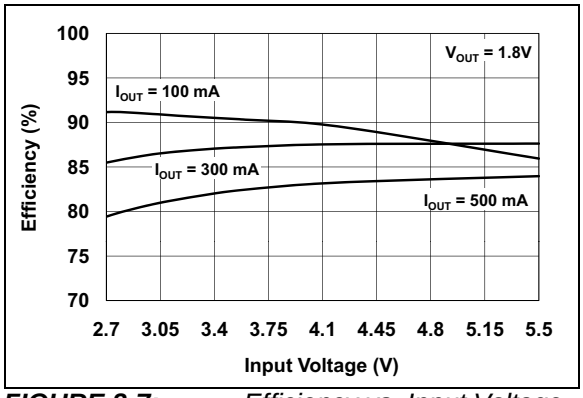

FIGURE 2-7: *Efficiency vs. Input Voltage (V_{OUT} = 1.8V).*

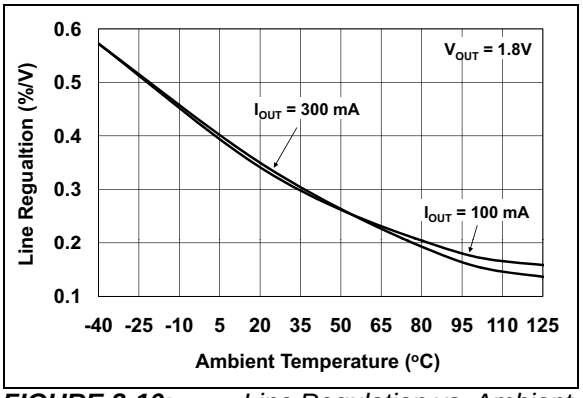

FIGURE 2-10: *Line Regulation vs. Ambient Temperature (V_{OUT} = 1.8V).*

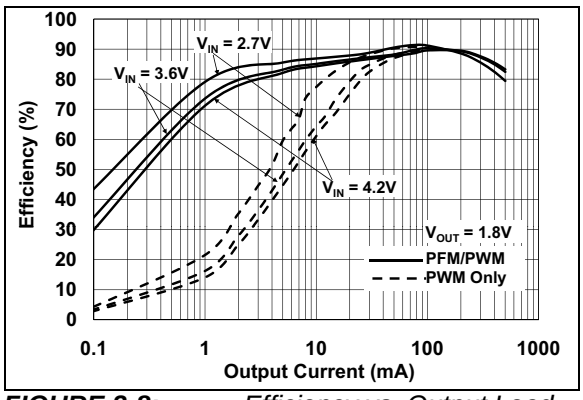

FIGURE 2-8: *Efficiency vs. Output Load (V_{OUT} = 1.8V).*

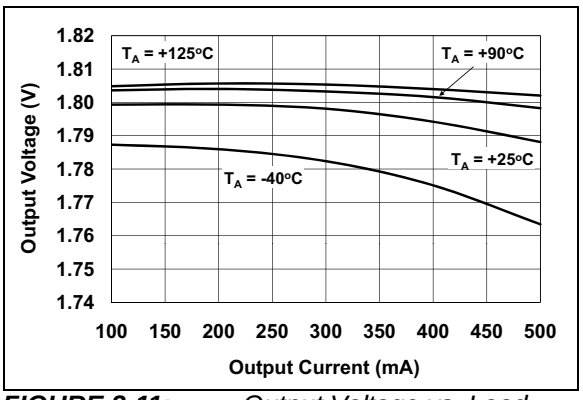

FIGURE 2-11: *Output Voltage vs. Load Current (V_{OUT} = 1.8V).*

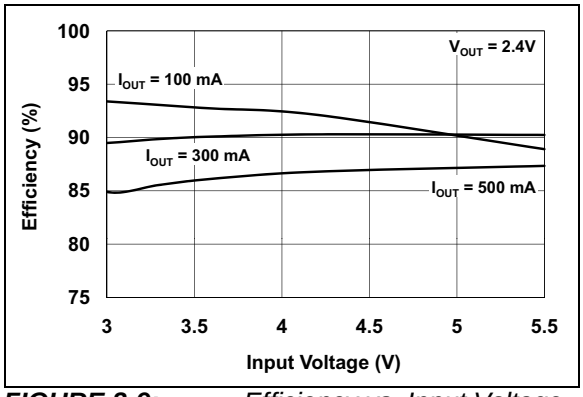

FIGURE 2-9: *Efficiency vs. Input Voltage (V_{OUT} = 2.4V).*

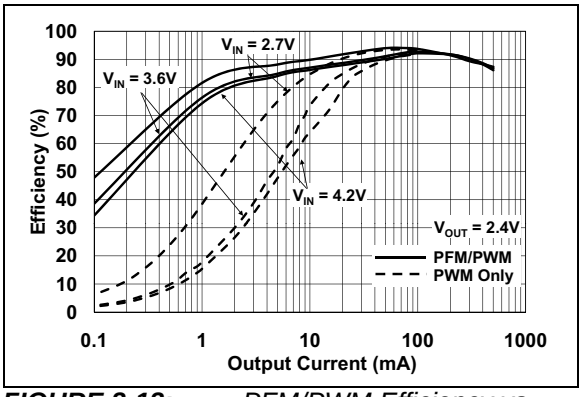

FIGURE 2-12: *PFM/PWM Efficiency vs. Output Load (V_{OUT} = 2.4V).*

© 2007-2012 Microchip Technology Inc.

Note: Unless otherwise indicated, MCP1603/L, $V_{IN} = \overline{SHDN} = 3.6V$, $C_{OUT} = C_{IN} = 4.7\ \mu F$, $L = 4.7\ \mu H$, $V_{OUT}(ADJ) = 1.8V$, $I_{LOAD} = 100\ mA$, $T_A = +25°C$. Adjustable or fixed output voltage options can be used to generate the Typical Performance Characteristics.

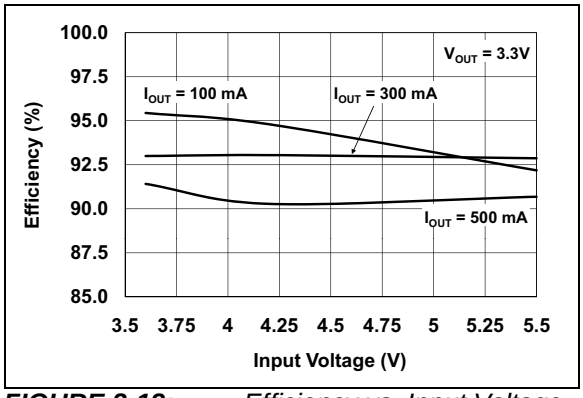

FIGURE 2-13: *Efficiency vs. Input Voltage (V_{OUT} = 3.3V).*

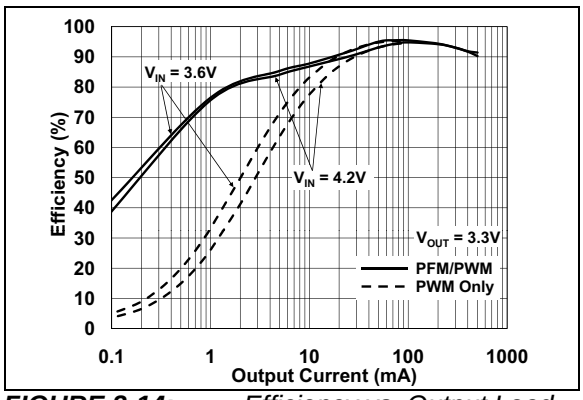

FIGURE 2-14: *Efficiency vs. Output Load (V_{OUT} = 3.3V).*

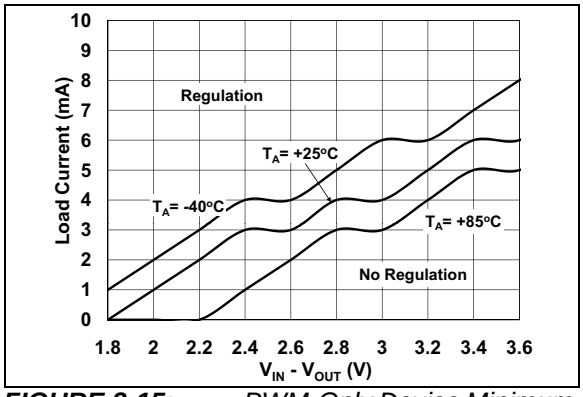

FIGURE 2-15: *PWM-Only Device Minimum Load for Regulation (**MCP1603B**).*

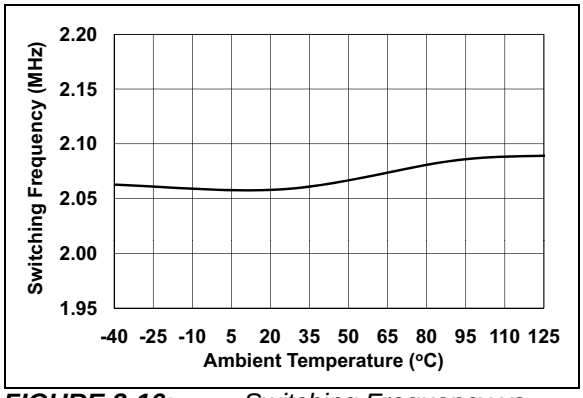

FIGURE 2-16: *Switching Frequency vs. Ambient Temperature.*

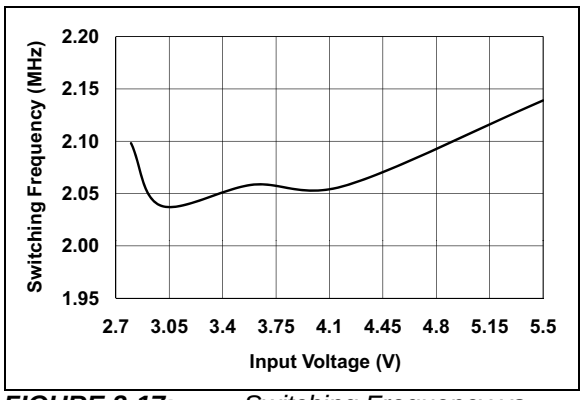

FIGURE 2-17: *Switching Frequency vs. Input Voltage.*

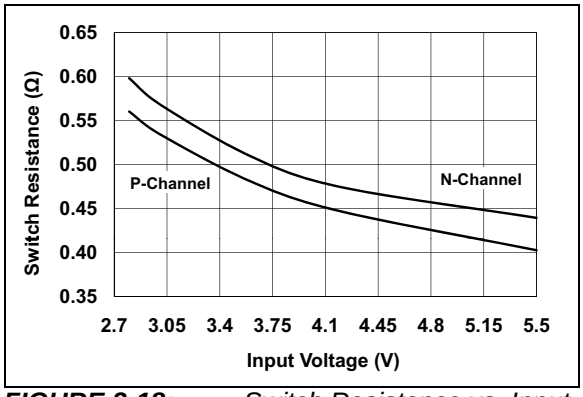

FIGURE 2-18: *Switch Resistance vs. Input Voltage.*

Note: Unless otherwise indicated, MCP1603/L, $V_{IN} = \overline{SHDN} = 3.6V$, $C_{OUT} = C_{IN} = 4.7\ \mu F$, L = 4.7 µH, $V_{OUT}(ADJ) = 1.8V$, $I_{LOAD} = 100$ mA, $T_A = +25°C$. Adjustable or fixed output voltage options can be used to generate the Typical Performance Characteristics.

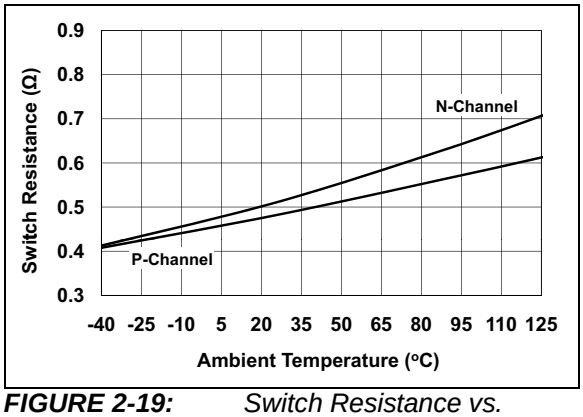

FIGURE 2-19: *Switch Resistance vs. Ambient Temperature.*

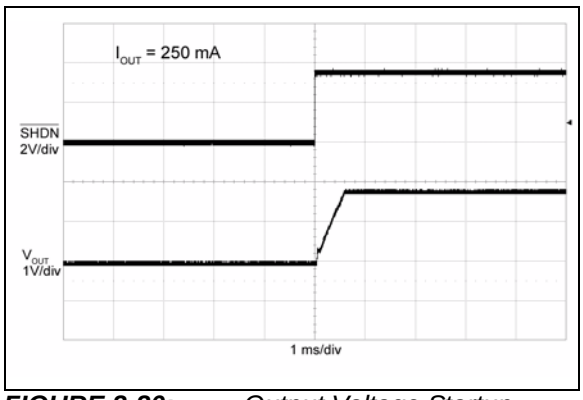

FIGURE 2-20: *Output Voltage Startup Waveform.*

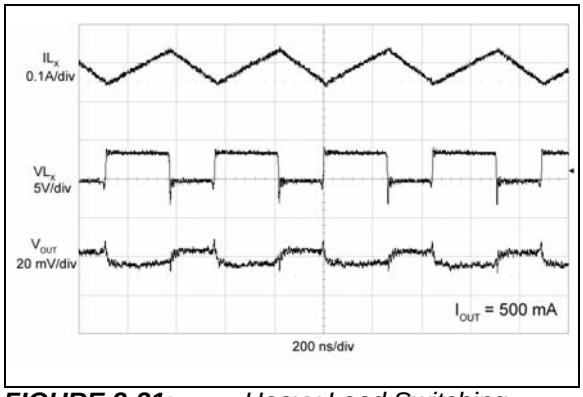

FIGURE 2-21: *Heavy Load Switching Waveform.*

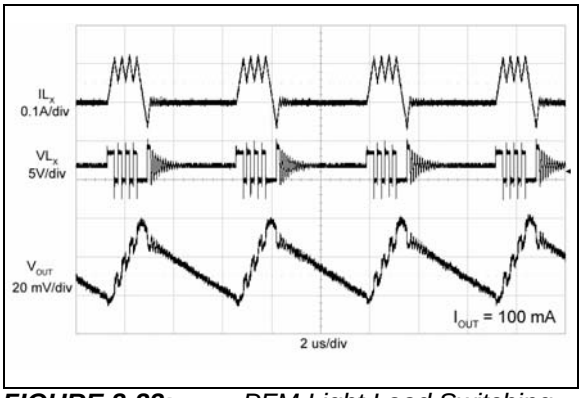

FIGURE 2-22: *PFM Light Load Switching Waveforms (**MCP1603/L**).*

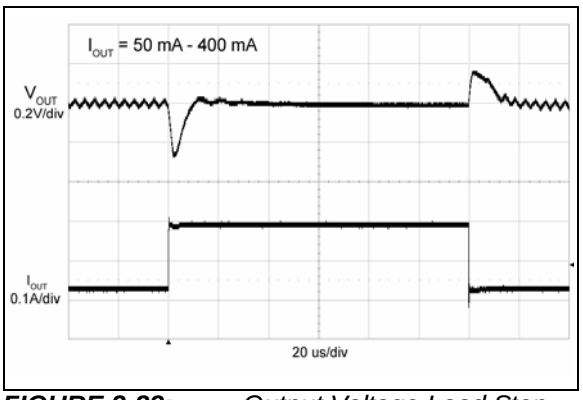

FIGURE 2-23: *Output Voltage Load Step Response vs. Time.*

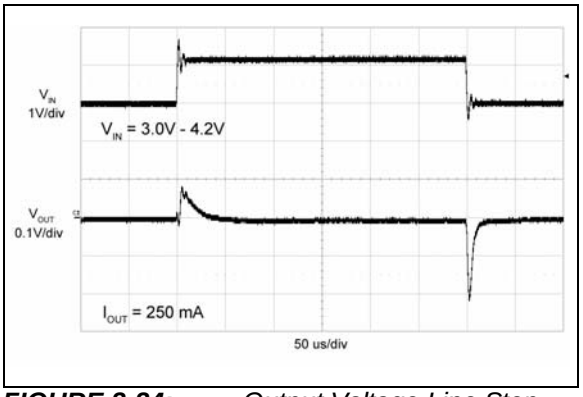

FIGURE 2-24: *Output Voltage Line Step Response vs. Time.*

© 2007-2012 Microchip Technology Inc.

Note: Unless otherwise indicated, MCP1603/L, $V_{IN} = \overline{SHDN} = 3.6V$, $C_{OUT} = C_{IN} = 4.7\ \mu F$, L = 4.7 µH, $V_{OUT}(ADJ) = 1.8V$, $I_{LOAD} = 100$ mA, $T_A = +25°C$. Adjustable or fixed output voltage options can be used to generate the Typical Performance Characteristics.

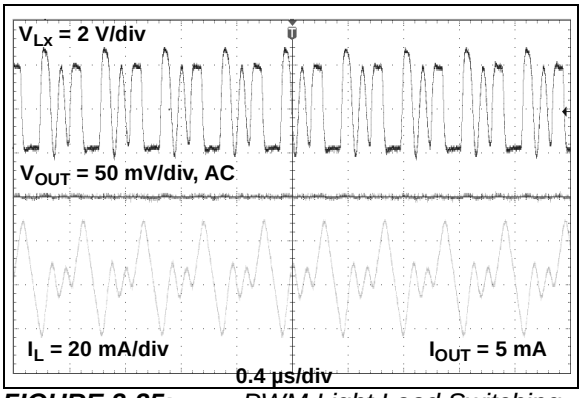

FIGURE 2-25: *PWM Light Load Switching Waveforms (**MCP1603B**).*

NOTES:

© 2007-2012 Microchip Technology Inc.

3.0 PIN DESCRIPTIONS

The descriptions of the pins are listed in Table 3-1.

TABLE 3-1: PIN FUNCTION TABLE

MCP1603/B TSOT-23	MCP1603L TSOT-23	MCP1603 2 x 3 DFN	Symbol	Description
1	4	7	V_{IN}	Power Supply Input Voltage Pin
2	2	8	GND	Ground Pin
3	1	3	$\overline{SHDN}$	Shutdown Control Input Pin
4	5	4	V_{FB}/V_{OUT}	Feedback / Output Voltage Pin
5	3	1	L_X	Switch Node, Buck Inductor Connection Pin
—	—	2, 5, 6	NC	No Connect
—	—	Exposed Pad	EP	For the DFN package, the center exposed pad is a thermal path to remove heat from the device. Electrically, this pad is at ground potential and should be connected to GND.

3.1 Power Supply Input Voltage Pin (V_{IN})

Connect the input voltage source to V_{IN}. The input source must be decoupled to GND with a 4.7 µF capacitor.

3.2 Ground Pin (GND)

Ground pin for the device. The loop area of the ground traces should be kept as minimal as possible.

3.3 Shutdown Control Input Pin ($\overline{SHDN}$)

The $\overline{SHDN}$ pin is a logic-level input used to enable or disable the device. A logic high (>45% of V_{IN}) will enable the regulator output. A logic low (<15% of V_{IN}) will ensure that the regulator is disabled.

3.4 Feedback / Output Voltage Pin (V_{FB}/V_{OUT})

For adjustable output options, connect the center of the output voltage divider to the V_{FB}/V_{OUT} pin. For fixed-output voltage options, connect the output directly to the V_{FB}/V_{OUT} pin.

3.5 Switch Node, Buck Inductor Connection Pin (L_X)

Connect the L_X pin directly to the buck inductor. This pin carries large signal-level current; all connections should be made as short as possible.

3.6 Exposed Metal Pad (EP)

For the DFN package, connect the Exposed Pad to GND, with vias into the GND plane. This connection to the GND plane will aid in heat removal from the package.

NOTES:

© 2007-2012 Microchip Technology Inc.

4.0 DETAILED DESCRIPTION

4.1 Device Overview

The MCP1603/L is a synchronous buck regulator that operates in a Pulse Frequency Modulation (PFM) mode or a Pulse Width Modulation (PWM) mode to maximize system efficiency over the entire operating current range. Capable of operating from a 2.7V to 5.5V input voltage source, the MCP1603 can deliver 500 mA of continuous output current.

The MCP1603B device disables the PFM mode switching, and operates only in normal PWM mode.

When using the MCP1603/B/L, the PCB area required for a complete step-down converter is minimized, since both the main P-Channel MOSFET and the synchronous N-Channel MOSFET are integrated. Also while in PWM mode, the device switches at a constant frequency of 2.0 MHz (typical), which allows for small filtering components. Both fixed and adjustable output voltage options are available. The fixed voltage options (1.2V, 1.5V 1.8V, 2.5V, 3.3V) do not require an external voltage divider, which further reduces the required circuit board footprint. The adjustable output voltage options allow for more flexibility in the design, but require an external voltage divider.

Additionally, the device features an undervoltage lockout (UVLO), overtemperature shutdown, overcurrent protection and enable/disable control.

4.2 Synchronous Buck Regulator

The MCP1603/L has two distinct modes of operation that allow the device to maintain a high level of efficiency throughout the entire operating current and voltage range. The device automatically switches between PWM mode and PFM mode, depending on the output load requirements. MCP1603B switches in PWM mode only.

4.2.1 PFM/PWM MODE DEVICE OPTION (**MCP1603/L**)

During heavy load conditions, the MCP1603/L operates at a high, fixed switching frequency of 2.0 MHz (typical) using current mode control. This minimizes output ripple (10 – 15 mV, typically) and noise, while maintaining high efficiency (88% typical with V_{IN} = 3.6V, V_{OUT} = 1.8V, I_{OUT} = 300 mA).

During normal PWM operation, the beginning of a switching cycle occurs when the internal P-Channel MOSFET is turned on. The ramping inductor current is sensed and tied to one input of the internal high-speed comparator. The other input to the high-speed comparator is the error amplifier output. This is the difference between the internal 0.8V reference and the divided-down output voltage. When the sensed current becomes equal to the amplified error signal, the high-speed comparator switches states and the P-Channel MOSFET is turned off. The N-Channel MOSFET is turned on until the internal oscillator sets an internal RS latch, initiating the beginning of another switching cycle.

PFM-to-PWM mode transition is initiated for any of the following conditions:

- Continuous device switching
- Output voltage has dropped out of regulation

4.2.1.1 Light Load, PFM Mode

During light-load conditions, the MCP1603/L operates in a PFM mode. When the MCP1603/L enters this mode, it begins to skip pulses to minimize unnecessary quiescent-current draw by reducing the number of switching cycles per second. The typical quiescent current draw for this device is 45 µA.

PWM-to-PFM mode transition is initiated for any of the following conditions:

- Discontinuous inductor current is sensed for a set duration
- Inductor peak current falls below the transition threshold limit

4.2.2 PWM MODE DEVICE OPTION (**MCP1603B**)

There are applications that cannot tolerate the low frequency pulse skipping mode or the output ripple voltage associated with it, which is distinctive for PFM switching.

The MCP1603B device has disabled the PFM mode switching. It operates only in normal PWM mode over the entire load range (without skipping pulses). During periods of light load operation, the MCP1603B continues to operate at a constant 2 MHz switching frequency, keeping the output ripple voltage lower than PFM mode. Because there are no skipping pulses, a minimum load current is necessary to keep output in regulation (see Figure 2-15, without a minimum load, the output voltage will be greater than the set point). The minimum load value depends on the input-to-output ratio.

4.3 Soft Start

The output of the MCP1603 is controlled during start-up. This control allows for a very minimal amount of V_{OUT} overshoot during start-up from V_{IN} rising above the UVLO voltage or $\overline{SHDN}$ being enabled.

4.4 Overtemperature Protection

Overtemperature protection circuitry is integrated in the MCP1603/B/L device family. This circuitry monitors the device junction temperature and shuts the device off, if the junction temperature exceeds the typical +150°C threshold. If this threshold is exceeded, the device will automatically restart once the junction temperature drops by approximately 10°C. The soft start is reset during an overtemperture condition.

4.5 Overcurrent Protection

Cycle-by-cycle current limiting is used to protect the MCP1603/B/L device family from being damaged when an external short circuit is applied. The typical peak current limit is 860 mA. If the sensed current reaches the 860 mA limit, the P-Channel MOSFET is turned off, even if the output voltage is not in regulation. The device will attempt to start a new switching cycle when the internal oscillator sets the internal RS latch.

4.6 Enable/Disable Control

The $\overline{SHDN}$ pin is used to enable or disable the MCP1603/B/L. When the $\overline{SHDN}$ pin is pulled low, the device is disabled. When pulled high, the device is enabled and begins operation, unless the input voltage is below the UVLO threshold or a fault condition exists.

4.7 Undervoltage Lockout (UVLO)

The UVLO feature uses a comparator to sense the input voltage (V_{IN}) level. If the input voltage is lower than the voltage necessary to properly operate the MCP1603, the UVLO feature will hold the converter off. When V_{IN} rises above the necessary input voltage, the UVLO is released and soft start begins. Hysteresis is built into the UVLO circuit to compensate for input impedance. For example, if there is any resistance between the input voltage source and the device when it is operating, there will be a voltage drop at the input to the device equal to I_{IN} x R_{IN}. The typical hysteresis is 140 mV.

© 2007-2012 Microchip Technology Inc.

5.0 APPLICATION INFORMATION

5.1 Typical Applications

The MCP1603/B/L 500 mA synchronous buck regulator operates over a wide input voltage range (2.7V to 5.5V) and is ideal for single-cell Li-Ion battery-powered applications, USB-powered applications, three cell NiMH or NiCd applications and 3V or 5V regulated input applications. The 5-lead TSOT and 8-lead 2 x 3 DFN packages provide a small footprint with minimal external components.

5.2 Fixed Output Voltage Applications

The **Typical Application Circuit** shows a fixed MCP1603/B/L in an application used to convert three NiMH batteries into a well-regulated 1.8V @ 500 mA output. A 4.7 µF input capacitor, 4.7 µF output capacitor, and a 4.7 µH inductor make up the entire external component solution for this application. No external voltage divider or compensation is necessary. In addition to the fixed 1.8V option, the MCP1603 is also available in 1.2V, 1.5V, 2.5V, or 3.3V fixed voltage options.

5.3 Adjustable Output Voltage Applications

When the desired output for a particular application is not covered by the fixed-voltage options, an adjustable MCP1603/B/L can be used. The circuit listed in Figure 6-2 shows an adjustable device being used to convert a 5V rail to 1.0V @ 500 mA. The output voltage is adjustable by using two external resistors as a voltage divider. For adjustable-output voltages, it is recommended that the top resistor divider value be 200 kΩ. The bottom resistor value can be calculated using the following equation:

EQUATION 5-1:

$$R_{BOT} = R_{TOP} \times \left(\frac{V_{FB}}{V_{OUT} - V_{FB}} \right)$$

Example:

R_{TOP} = 200 kΩ
V_{OUT} = 1.0V
V_{FB} = 0.8V

R_{BOT} = 200 kΩ x (0.8V/(1.0V – 0.8V))
R_{BOT} = 800 kΩ (Standard Value = 787 kΩ)

For adjustable output applications, an additional R-C compensation network is necessary for control loop stability. Recommended values for any output voltage are:

R_{COMP} = 4.99 kΩ
C_{COMP} = 33 pF

Refer to Figure 6-2 for proper placement of R_{COMP} and C_{COMP}.

5.4 Input Capacitor Selection

The input current to a buck converter, when operating in Continuous Conduction mode, is a squarewave with a duty cycle defined by the output voltage (V_{OUT}) to input voltage (V_{IN}) relationship of V_{OUT}/V_{IN}. To prevent undesirable input voltage transients, the input capacitor should be a low-ESR type with an RMS current rating given by Equation 5.5. Because of their small size and low ESR, ceramic capacitors are often used. Ceramic material X5R or X7R are well suited, since they have a low-temperature coefficient and acceptable ESR.

EQUATION 5-2:

$$I_{CIN,RMS} = I_{OUT,MAX} \times \left(\sqrt{\frac{V_{OUT} \times (V_{IN} - V_{OUT})}{V_{IN}}} \right)$$

Table 5-1 contains the recommend range for the input capacitor value.

5.5 Output Capacitor Selection

The output capacitor helps provide a stable output voltage during sudden load transients, smooths the current that flows from the inductor to the load, and reduces the output voltage ripple. Therefore, low-ESR capacitors are a desirable choice for the output capacitor. As with the input capacitor, X5R and X7R ceramic capacitors are well suited for this application.

The output ripple voltage is often a design specification. A buck converters' output ripple voltage is a function of the charging and discharging of the output capacitor and the ESR of the capacitor. This ripple voltage can be calculated by Equation 5-3.

EQUATION 5-3:

$$\Delta V_{OUT} = \Delta I_L \times ESR + \frac{\Delta I_L}{8 \times f \times C}$$

Table 5-1 contains the recommend range for the output capacitor value.

TABLE 5-1: CAPACITOR VALUE RANGE

	C_{IN}	C_{OUT}
Minimum	4.7 µF	4.7 µF
Maximum	—	22 µF

5.6 Inductor Selection

When using the MCP1603, the inductance value can range from 3.3 µH to 10 µH. An inductance value of 4.7 µH is recommended to achieve a good balance between converter load transient response and minimized noise.

The value of inductance is selected to achieve a desired amount of ripple current. It is reasonable to assume a ripple current that is 20% of the maximum load current. The larger the amount of ripple current allowed, the larger the output capacitor value becomes to meet ripple voltage specifications. The inductor ripple current can be calculated according to the following equation.

EQUATION 5-4:

$$\Delta I_L = \frac{V_{OUT}}{F_{SW} \times L} \times \left(1 - \frac{V_{OUT}}{V_{IN}}\right)$$

Where:

F_{SW} = Switching Frequency

When considering inductor ratings, the maximum DC current rating of the inductor should be at least equal to the maximum load current, plus one half the peak-to-peak inductor ripple current (1/2 x ΔI_L). The inductor DC resistance adds to the total converter power loss. An inductor with a low DC resistance allows for higher converter efficiency.

TABLE 5-2: MCP1603 RECOMMENDED INDUCTORS

Part Number	Value (µH)	DCR Ω (max)	I_{SAT} (A)	Size WxLxH (mm)
Coiltronics®				
SD3110	3.3	0.195	0.81	3.1x3.1x1.0
SD3110	4.7	0.285	0.68	3.1x3.1x1.0
SD3110	6.8	0.346	0.58	3.1x3.1x1.0
SD3812	3.3	0.159	1.40	3.8x3.8x1.2
SD3812	4.7	0.256	1.13	3.8x3.8x1.2
SD3812	6.8	0.299	0.95	3.8x3.8x1.2
Würth Elektronik®				
WE-TPC Type XS	3.3	0.225	0.72	3.3x3.5x0.95
WE-TPC Type XS	4.7	0.290	0.50	3.3x3.5x0.95
WE-TPC Type S	4.7	0.105	0.90	3.8x3.8x1.65
WE-TPC Type S	6.8	0.156	0.75	3.8x3.8x1.65
WE-TPC Type Tiny	4.7	0.100	1.7	2.8x2.8x2.8

TABLE 5-2: MCP1603 RECOMMENDED INDUCTORS (CONTINUED)

Part Number	Value (µH)	DCR Ω (max)	I_{SAT} (A)	Size WxLxH (mm)
Sumida®				
CMD4D06	3.3	0.174	0.77	3.5x4.3x0.8
CMD4D06	4.7	0.216	0.75	3.5x4.3x0.8
CMD4D06	6.8	0.296	0.62	3.5x4.3x0.8
Coilcraft®				
XFL3012-332ME_	3.3	0.106	1.2	3x3x1.2
XFL3012-472ME_	4.7	0.143	1.0	3x3x1.2
LPS4018-103ML_	10	0.200	1.2	4x4x1.8
TDK-EPC®				
B82462_G4472M	4.7	0.04	1.8	6x6x3
VLS3015ET-4R7M	4.7	0.113	1.1	3x3x1.5

5.7 Thermal Calculations

The MCP1603 is available in two different packages (TSOT-23 and 2x3 DFN). The junction temperature is estimated by calculating the power dissipation and applying the package thermal resistance (θ_{JA}). The maximum continuous junction temperature rating for the MCP1603 is +125°C.

To quickly estimate the internal power dissipation for the switching buck regulator, an empirical calculation using measured efficiency can be used. Given the measured efficiency, the internal power dissipation is estimated by the following equation:

EQUATION 5-5:

$$\left(\frac{V_{OUT} \times I_{OUT}}{Efficiency}\right) - (V_{OUT} \times I_{OUT}) = P_{Diss}$$

The difference between the first term, input power dissipation, and the second term, power delivered, is the internal power dissipation. This is an estimate assuming that most of the power lost is internal to the MCP1603. There is some percentage of power lost in the buck inductor, with very little loss in the input and output capacitors.

© 2007-2012 Microchip Technology Inc.

5.8 PCB Layout Information

Good printed circuit board layout techniques are important to any switching circuitry, and switching power supplies are no different. When wiring the high-current paths, short and wide traces should be used. This high-current path is shown with red connections in Figure 5-1. The current in this path is switching. Therefore, it is important that the components along the high-current path should be placed as close as possible to the MCP1603 to minimize the loop area.

The feedback resistors and feedback signal should be routed away from the switching node and this switching current loop. When possible, ground planes and traces should be used to help shield the feedback signal and minimize noise and magnetic interference.

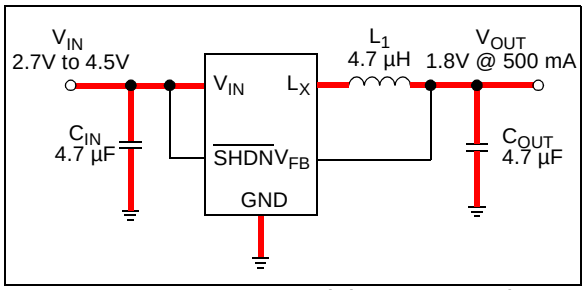

FIGURE 5-1: *PCB High Current Path.*

NOTES:

© 2007-2012 Microchip Technology Inc.

6.0 TYPICAL APPLICATION CIRCUITS

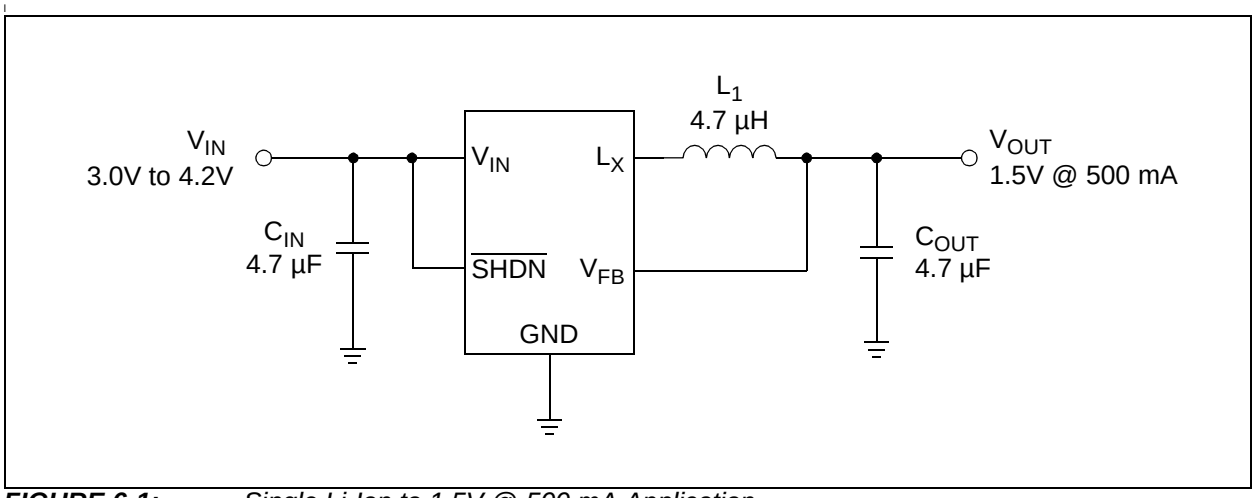

FIGURE 6-1: *Single Li-Ion to 1.5V @ 500 mA Application.*

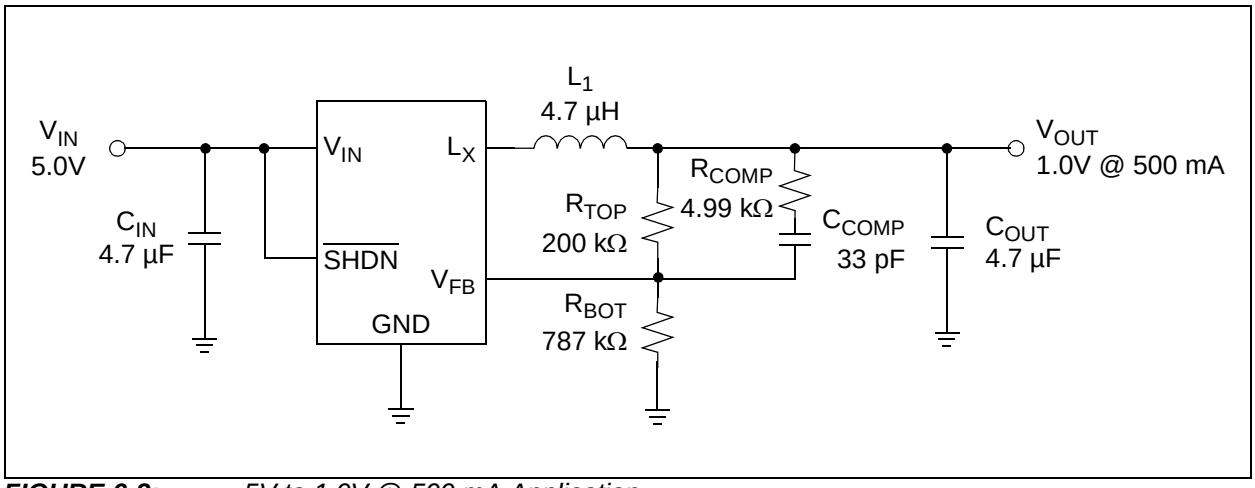

FIGURE 6-2: *5V to 1.0V @ 500 mA Application.*

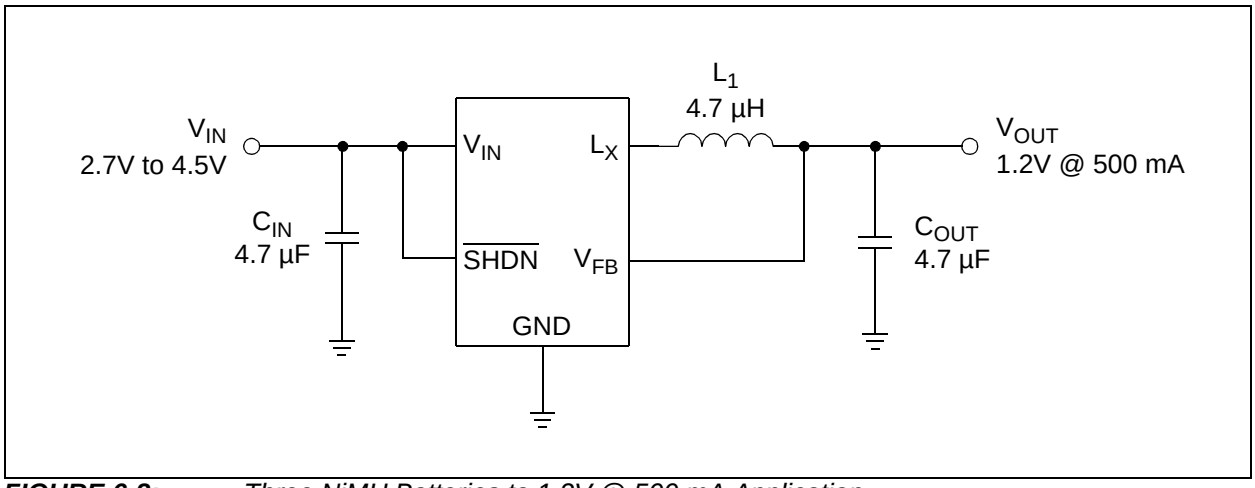

FIGURE 6-3: *Three NiMH Batteries to 1.2V @ 500 mA Application.*

NOTES:

© 2007-2012 Microchip Technology Inc.

7.0 PACKAGING INFORMATION

7.1 Package Marking Information

5-Lead TSOT-23

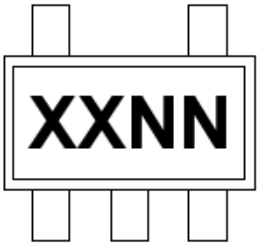

Part Number	Code
MCP1603T-120I/OS	ETNN
MCP1603T-150I/OS	EUNN
MCP1603T-180I/OS	EVNN
MCP1603T-250I/OS	EWNN
MCP1603T-330I/OS	EXNN
MCP1603T-ADJI/OS	EYNN
MCP1603BT-180I/OS	GBNN
MCP1603BT-330I/OS	GENN
MCP1603BT-ADJI/OS	GANN
MCP1603LT-120I/OS	FMNN
MCP1603LT-150I/OS	FKNN
MCP1603LT-180I/OS	EJNN
MCP1603LT-250I/OS	FGNN
MCP1603LT-330I/OS	FANN
MCP1603LT-ADJI/OS	FQNN

Example:

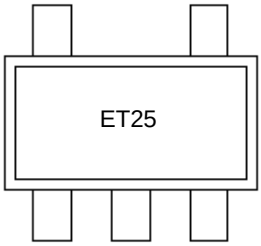

8-Lead 2x3 DFN

Part Number	Code
MCP1603-120I/MC	AFM
MCP1603T-120I/MC	AFM
MCP1603-150I/MC	AFK
MCP1603T-150I/MC	AFK
MCP1603-180I/MC	AFJ
MCP1603T-180I/MC	AFJ
MCP1603-250I/MC	AFG
MCP1603T-250I/MC	AFG
MCP1603-330I/MC	AFA
MCP1603T-330I/MC	AFA
MCP1603-ADJI/MC	AFQ
MCP1603T-ADJI/MC	AFQ

Example:

Legend:	XX...X	Customer-specific information
	Y	Year code (last digit of calendar year)
	YY	Year code (last 2 digits of calendar year)
	WW	Week code (week of January 1 is week ‘01’)
	NNN	Alphanumeric traceability code
	(e3)	Pb-free JEDEC designator for Matte Tin (Sn)
	*	This package is Pb-free. The Pb-free JEDEC designator (e3) can be found on the outer packaging for this package.
Note:	In the event the full Microchip part number cannot be marked on one line, it will be carried over to the next line, thus limiting the number of available characters for customer-specific information.	

5-Lead Plastic Thin Small Outline Transistor (OS) [TSOT]

Note: For the most current package drawings, please see the Microchip Packaging Specification located at http://www.microchip.com/packaging

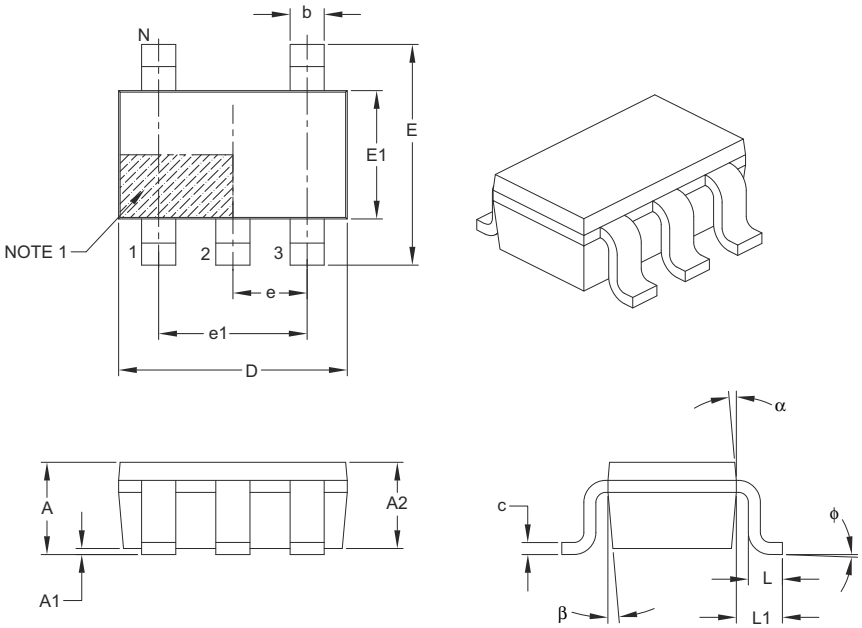

Units		MILLIMETERS		
Dimension Limits		MIN	NOM	MAX
Number of Leads	N	5		
Lead Pitch	e	0.95 BSC		
Outside Lead Pitch	e1	1.90 BSC		
Overall Height	A	–	–	1.10
Molded Package Thickness	A2	0.70	0.90	1.00
Standoff	A1	0.00	–	0.10
Overall Width	E	2.80 BSC		
Molded Package Width	E1	1.60 BSC		
Overall Length	D	2.90 BSC		
Foot Length	L	0.30	0.45	0.60
Footprint	L1	0.60 REF		
Foot Angle	ϕ	0°	4°	8°
Lead Thickness	c	0.08	–	0.20
Lead Width	b	0.30	–	0.50
Mold Draft Angle Top	α	4°	10°	12°
Mold Draft Angle Bottom	β	4°	10°	12°

Notes:

1. Pin 1 visual index feature may vary, but must be located within the hatched area.
2. Dimensions D and E1 do not include mold flash or protrusions. Mold flash or protrusions shall not exceed 0.15 mm per side.
3. Dimensioning and tolerancing per ASME Y14.5M.

   BSC: Basic Dimension. Theoretically exact value shown without tolerances.
   REF: Reference Dimension, usually without tolerance, for information purposes only.

Microchip Technology Drawing C04-128B

© 2007-2012 Microchip Technology Inc.

5-Lead Plastic Thin Small Outline Transistor (OS) [TSOT]

Note: For the most current package drawings, please see the Microchip Packaging Specification located at http://www.microchip.com/packaging

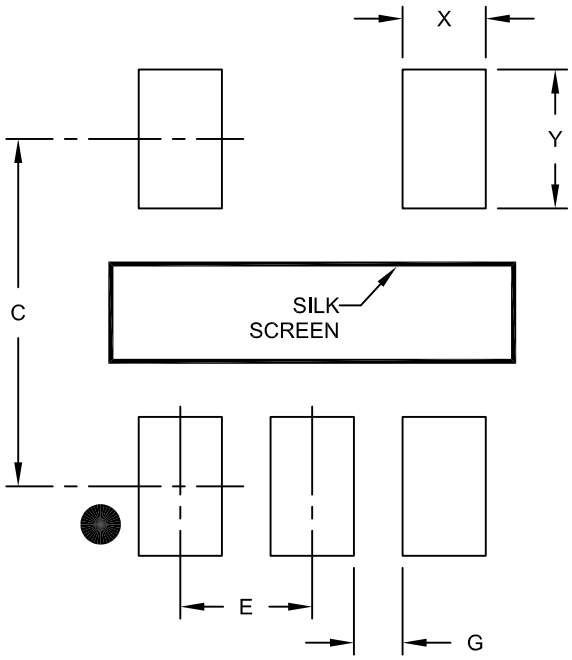

RECOMMENDED LAND PATTERN

Units		MILLIMETERS		
Dimension Limits		MIN	NOM	MAX
Contact Pitch	E		0.95 BSC	
Contact Pad Spacing	C		2.80	
Contact Pad Width (X5)	X			0.60
Contact Pad Length (X5)	Y			1.10
Distance Between Pads	G	0.35		

Notes:

1. Dimensioning and tolerancing per ASME Y14.5M

BSC: Basic Dimension. Theoretically exact value shown without tolerances.

Microchip Technology Drawing No. C04-2128A

8-Lead Plastic Dual Flat, No Lead Package (MC) – 2x3x0.9 mm Body [DFN]

Note: For the most current package drawings, please see the Microchip Packaging Specification located at http://www.microchip.com/packaging

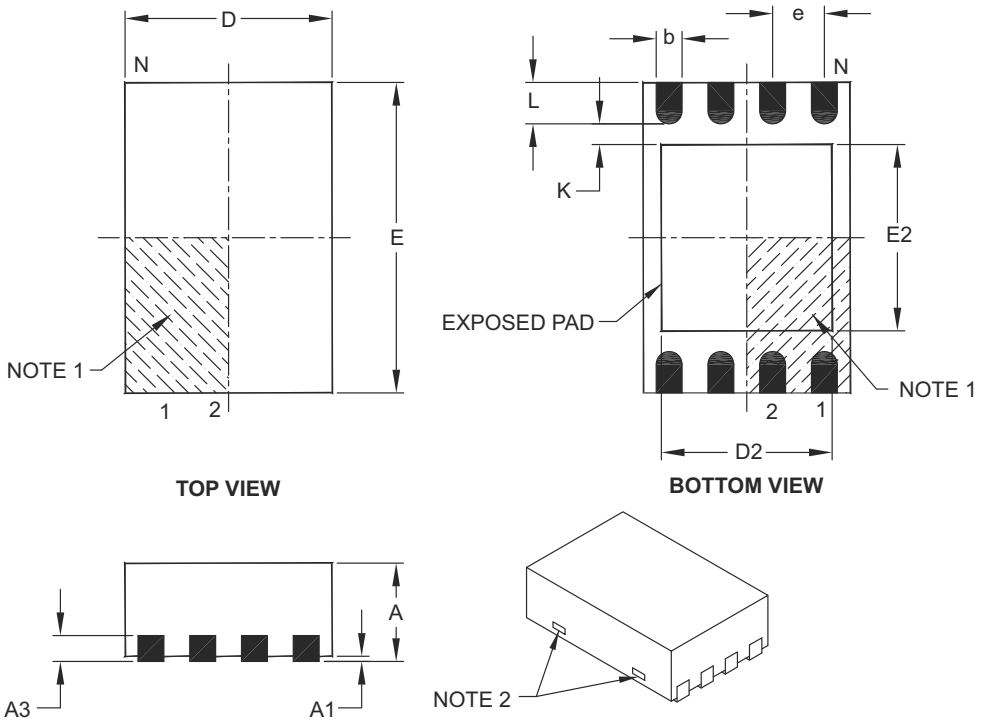

Units		MILLIMETERS		
Dimension Limits		MIN	NOM	MAX
Number of Pins	N	8		
Pitch	e	0.50 BSC		
Overall Height	A	0.80	0.90	1.00
Standoff	A1	0.00	0.02	0.05
Contact Thickness	A3	0.20 REF		
Overall Length	D	2.00 BSC		
Overall Width	E	3.00 BSC		
Exposed Pad Length	D2	1.30	–	1.55
Exposed Pad Width	E2	1.50	–	1.75
Contact Width	b	0.20	0.25	0.30
Contact Length	L	0.30	0.40	0.50
Contact-to-Exposed Pad	K	0.20	–	–

Notes:

1. Pin 1 visual index feature may vary, but must be located within the hatched area.
2. Package may have one or more exposed tie bars at ends.
3. Package is saw singulated.
4. Dimensioning and tolerancing per ASME Y14.5M.

   BSC: Basic Dimension. Theoretically exact value shown without tolerances.

   REF: Reference Dimension, usually without tolerance, for information purposes only.

Microchip Technology Drawing C04-123C

© 2007-2012 Microchip Technology Inc.

8-Lead Plastic Dual Flat, No Lead Package (MC) - 2x3x0.9mm Body [DFN]

Note: For the most current package drawings, please see the Microchip Packaging Specification located at http://www.microchip.com/packaging

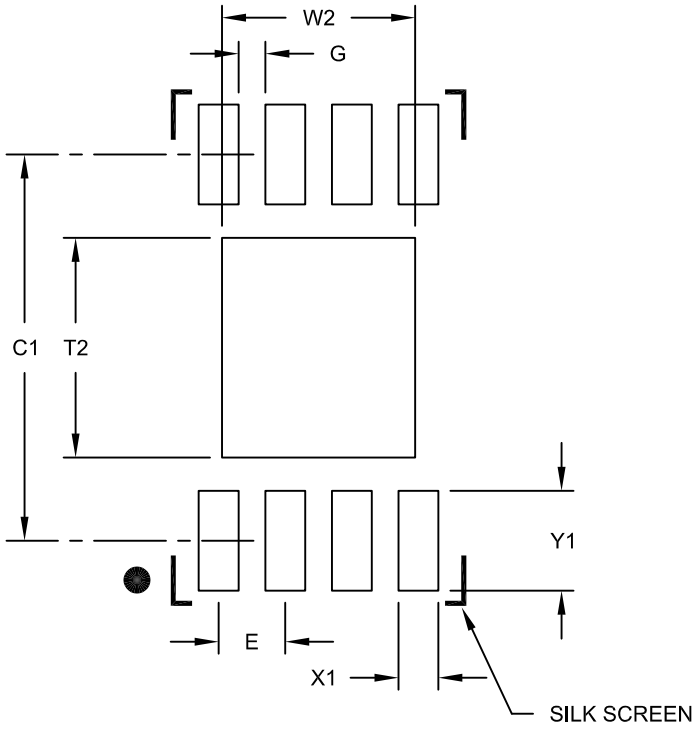

RECOMMENDED LAND PATTERN

Units		MILLIMETERS		
Dimension Limits		MIN	NOM	MAX
Contact Pitch	E		0.50 BSC	
Optional Center Pad Width	W2			1.45
Optional Center Pad Length	T2			1.75
Contact Pad Spacing	C1		2.90	
Contact Pad Width (X8)	X1			0.30
Contact Pad Length (X8)	Y1			0.75
Distance Between Pads	G	0.20		

Notes:

1. Dimensioning and tolerancing per ASME Y14.5M

BSC: Basic Dimension. Theoretically exact value shown without tolerances.

Microchip Technology Drawing No. C04-2123B

NOTES:

© 2007-2012 Microchip Technology Inc.

APPENDIX A: REVISION HISTORY

Revision B (October 2012)

The following is the list of modifications:

1. Added new device option (MCP1603B) with PWM mode only. Added details on this device throughout the document.
2. Updated Typical Application Circuit graphic to show both available options for the MCP1603/B/L family.
3. Added new graphics to Section 2.0, Typical Performance Curves: Figures 2-2, 2-5, 2-15 and 2-25. Updated Figures 2-6, 2-8, 2-12 and 2-14.
4. Restructured Section 4.2, Synchronous Buck Regulator to show both PFM/PWM and PWM-only modes.
5. Updated Table 5-2.
6. Updated Section 7.1, Package Marking Information with available marking codes and package specification drawings.
7. Updated the Product Identification System section.

Revision A (May 2007)

- Original Release of this Document.

NOTES:

© 2007-2012 Microchip Technology Inc.

PRODUCT IDENTIFICATION SYSTEM

To order or obtain information, e.g., on pricing or delivery, refer to the factory or the listed sales office.

PART NO. **-XXX** **X** **/XX**

Device **Voltage Option** **Temperature** **Package**

Device: MCP1603: 2.0 MHz, 500 mA Buck Regulator with PFM/PWM Mode
MCP1603B: 2.0 MHz, 500 mA Buck Regulator with PWM-only
MCP1603L: 2.0 MHz, 500 mA Buck Regulator with PFM/PWM Mode and Alternate Pinout

Voltage Option:

	MCP1603	MCP1603B	MCP1603L
ADJ = Adjustable	X	X	X
120 = 1.20V Standard	X	—	X
150 = 1.50V Standard	X	—	X
180 = 1.80V Standard	X	X	X
250 = 2.50V Standard	X	—	X
330 = 3.30V Standard	X	X	X

Temperature: I = -40°C to +85°C

Package Type: MC = Plastic Dual-Flat No-Lead Package (MC), 8-Lead
OS = Plastic Thin Small Outline Transistor (OS), 5-Lead

Examples:

a) MCP1603-180I/MC: 1.80V Buck Regulator, Industrial Temperature, 8LD-DFN package

b) MCP1603T-180I/MC: Tape and Reel, 1.80V Buck Regulator, Industrial Temperature, 8LD-DFN package

c) MCP1603T-180I/OS: Tape and Reel 1.80V Buck Regulator, Industrial Temperature, 5LD-TSOT package

a) MCP1603BT-180I/OS: Tape and Reel, 1.80V Buck Regulator with PWM Only, Industrial Temperature, 5LD-TSOT package

a) MCP1603LT-180I/OS: Tape and Reel, 1.80V Buck Regulator with Alternate TSOT Pinout, Industrial Temperature, 5LD-TSOT package.

NOTES:

© 2007-2012 Microchip Technology Inc.

Note the following details of the code protection feature on Microchip devices:

- Microchip products meet the specification contained in their particular Microchip Data Sheet.
- Microchip believes that its family of products is one of the most secure families of its kind on the market today, when used in the intended manner and under normal conditions.
- There are dishonest and possibly illegal methods used to breach the code protection feature. All of these methods, to our knowledge, require using the Microchip products in a manner outside the operating specifications contained in Microchip's Data Sheets. Most likely, the person doing so is engaged in theft of intellectual property.
- Microchip is willing to work with the customer who is concerned about the integrity of their code.
- Neither Microchip nor any other semiconductor manufacturer can guarantee the security of their code. Code protection does not mean that we are guaranteeing the product as "unbreakable."

Code protection is constantly evolving. We at Microchip are committed to continuously improving the code protection features of our products. Attempts to break Microchip's code protection feature may be a violation of the Digital Millennium Copyright Act. If such acts allow unauthorized access to your software or other copyrighted work, you may have a right to sue for relief under that Act.

Information contained in this publication regarding device applications and the like is provided only for your convenience and may be superseded by updates. It is your responsibility to ensure that your application meets with your specifications. MICROCHIP MAKES NO REPRESENTATIONS OR WARRANTIES OF ANY KIND WHETHER EXPRESS OR IMPLIED, WRITTEN OR ORAL, STATUTORY OR OTHERWISE, RELATED TO THE INFORMATION, INCLUDING BUT NOT LIMITED TO ITS CONDITION, QUALITY, PERFORMANCE, MERCHANTABILITY OR FITNESS FOR PURPOSE**.** Microchip disclaims all liability arising from this information and its use. Use of Microchip devices in life support and/or safety applications is entirely at the buyer's risk, and the buyer agrees to defend, indemnify and hold harmless Microchip from any and all damages, claims, suits, or expenses resulting from such use. No licenses are conveyed, implicitly or otherwise, under any Microchip intellectual property rights.

QUALITY MANAGEMENT SYSTEM
CERTIFIED BY DNV
= ISO/TS 16949 =

Trademarks

The Microchip name and logo, the Microchip logo, dsPIC, FlashFlex, KEELOQ, KEELOQ logo, MPLAB, PIC, PICmicro, PICSTART, PIC^{32} logo, rfPIC, SST, SST Logo, SuperFlash and UNI/O are registered trademarks of Microchip Technology Incorporated in the U.S.A. and other countries.

FilterLab, Hampshire, HI-TECH C, Linear Active Thermistor, MTP, SEEVAL and The Embedded Control Solutions Company are registered trademarks of Microchip Technology Incorporated in the U.S.A.

Silicon Storage Technology is a registered trademark of Microchip Technology Inc. in other countries.

Analog-for-the-Digital Age, Application Maestro, BodyCom, chipKIT, chipKIT logo, CodeGuard, dsPICDEM, dsPICDEM.net, dsPICworks, dsSPEAK, ECAN, ECONOMONITOR, FanSense, HI-TIDE, In-Circuit Serial Programming, ICSP, Mindi, MiWi, MPASM, MPF, MPLAB Certified logo, MPLIB, MPLINK, mTouch, Omniscient Code Generation, PICC, PICC-18, PICDEM, PICDEM.net, PICkit, PICtail, REAL ICE, rfLAB, Select Mode, SQI, Serial Quad I/O, Total Endurance, TSHARC, UniWinDriver, WiperLock, ZENA and Z-Scale are trademarks of Microchip Technology Incorporated in the U.S.A. and other countries.

SQTP is a service mark of Microchip Technology Incorporated in the U.S.A.

GestIC and ULPP are registered trademarks of Microchip Technology Germany II GmbH & Co. & KG, a subsidiary of Microchip Technology Inc., in other countries.

All other trademarks mentioned herein are property of their respective companies.

© 2007-2012, Microchip Technology Incorporated, Printed in the U.S.A., All Rights Reserved.

Printed on recycled paper.

ISBN: 978-1-62076-632-3

Microchip received ISO/TS-16949:2009 certification for its worldwide headquarters, design and wafer fabrication facilities in Chandler and Tempe, Arizona; Gresham, Oregon and design centers in California and India. The Company's quality system processes and procedures are for its PIC® MCUs and dsPIC® DSCs, KEELOQ® code hopping devices, Serial EEPROMs, microperipherals, nonvolatile memory and analog products. In addition, Microchip's quality system for the design and manufacture of development systems is ISO 9001:2000 certified.

Worldwide Sales and Service

AMERICAS

Corporate Office
2355 West Chandler Blvd.
Chandler, AZ 85224-6199
Tel: 480-792-7200
Fax: 480-792-7277
Technical Support:
http://www.microchip.com/support
Web Address:
www.microchip.com

Atlanta
Duluth, GA
Tel: 678-957-9614
Fax: 678-957-1455

Boston
Westborough, MA
Tel: 774-760-0087
Fax: 774-760-0088

Chicago
Itasca, IL
Tel: 630-285-0071
Fax: 630-285-0075

Cleveland
Independence, OH
Tel: 216-447-0464
Fax: 216-447-0643

Dallas
Addison, TX
Tel: 972-818-7423
Fax: 972-818-2924

Detroit
Farmington Hills, MI
Tel: 248-538-2250
Fax: 248-538-2260

Indianapolis
Noblesville, IN
Tel: 317-773-8323
Fax: 317-773-5453

Los Angeles
Mission Viejo, CA
Tel: 949-462-9523
Fax: 949-462-9608

Santa Clara
Santa Clara, CA
Tel: 408-961-6444
Fax: 408-961-6445

Toronto
Mississauga, Ontario, Canada
Tel: 905-673-0699
Fax: 905-673-6509

ASIA/PACIFIC

Asia Pacific Office
Suites 3707-14, 37th Floor
Tower 6, The Gateway
Harbour City, Kowloon
Hong Kong
Tel: 852-2401-1200
Fax: 852-2401-3431

Australia - Sydney
Tel: 61-2-9868-6733
Fax: 61-2-9868-6755

China - Beijing
Tel: 86-10-8569-7000
Fax: 86-10-8528-2104

China - Chengdu
Tel: 86-28-8665-5511
Fax: 86-28-8665-7889

China - Chongqing
Tel: 86-23-8980-9588
Fax: 86-23-8980-9500

China - Hangzhou
Tel: 86-571-2819-3187
Fax: 86-571-2819-3189

China - Hong Kong SAR
Tel: 852-2401-1200
Fax: 852-2401-3431

China - Nanjing
Tel: 86-25-8473-2460
Fax: 86-25-8473-2470

China - Qingdao
Tel: 86-532-8502-7355
Fax: 86-532-8502-7205

China - Shanghai
Tel: 86-21-5407-5533
Fax: 86-21-5407-5066

China - Shenyang
Tel: 86-24-2334-2829
Fax: 86-24-2334-2393

China - Shenzhen
Tel: 86-755-8203-2660
Fax: 86-755-8203-1760

China - Wuhan
Tel: 86-27-5980-5300
Fax: 86-27-5980-5118

China - Xian
Tel: 86-29-8833-7252
Fax: 86-29-8833-7256

China - Xiamen
Tel: 86-592-2388138
Fax: 86-592-2388130

China - Zhuhai
Tel: 86-756-3210040
Fax: 86-756-3210049

ASIA/PACIFIC

India - Bangalore
Tel: 91-80-3090-4444
Fax: 91-80-3090-4123

India - New Delhi
Tel: 91-11-4160-8631
Fax: 91-11-4160-8632

India - Pune
Tel: 91-20-2566-1512
Fax: 91-20-2566-1513

Japan - Osaka
Tel: 81-66-152-7160
Fax: 81-66-152-9310

Japan - Yokohama
Tel: 81-45-471- 6166
Fax: 81-45-471-6122

Korea - Daegu
Tel: 82-53-744-4301
Fax: 82-53-744-4302

Korea - Seoul
Tel: 82-2-554-7200
Fax: 82-2-558-5932 or
82-2-558-5934

Malaysia - Kuala Lumpur
Tel: 60-3-6201-9857
Fax: 60-3-6201-9859

Malaysia - Penang
Tel: 60-4-227-8870
Fax: 60-4-227-4068

Philippines - Manila
Tel: 63-2-634-9065
Fax: 63-2-634-9069

Singapore
Tel: 65-6334-8870
Fax: 65-6334-8850

Taiwan - Hsin Chu
Tel: 886-3-5778-366
Fax: 886-3-5770-955

Taiwan - Kaohsiung
Tel: 886-7-536-4818
Fax: 886-7-330-9305

Taiwan - Taipei
Tel: 886-2-2500-6610
Fax: 886-2-2508-0102

Thailand - Bangkok
Tel: 66-2-694-1351
Fax: 66-2-694-1350

EUROPE

Austria - Wels
Tel: 43-7242-2244-39
Fax: 43-7242-2244-393

Denmark - Copenhagen
Tel: 45-4450-2828
Fax: 45-4485-2829

France - Paris
Tel: 33-1-69-53-63-20
Fax: 33-1-69-30-90-79

Germany - Munich
Tel: 49-89-627-144-0
Fax: 49-89-627-144-44

Italy - Milan
Tel: 39-0331-742611
Fax: 39-0331-466781

Netherlands - Drunen
Tel: 31-416-690399
Fax: 31-416-690340

Spain - Madrid
Tel: 34-91-708-08-90
Fax: 34-91-708-08-91

UK - Wokingham
Tel: 44-118-921-5869
Fax: 44-118-921-5820

11/29/11

© 2007-2012 Microchip Technology Inc.